LAYOUT

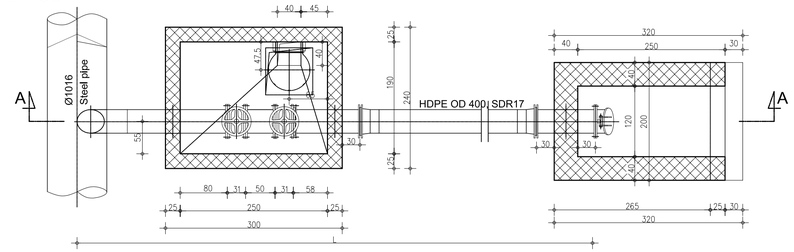

UPPER SLAB

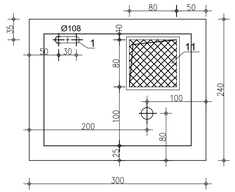

SECTION A-A

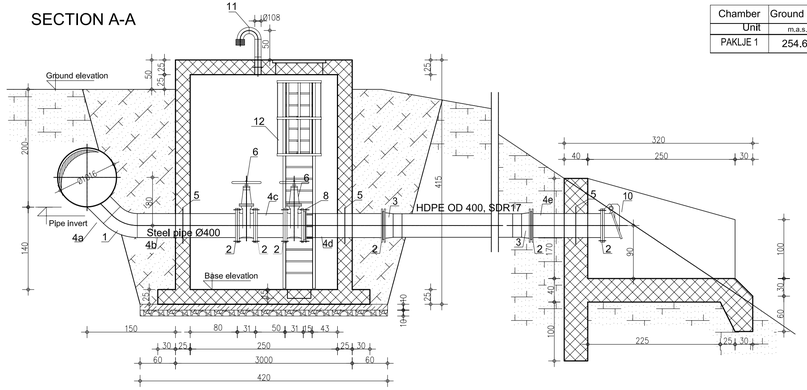

Chamber	Ground elev.	Washout	L	Outlet
Unit	m.a.s.l.	DN	m	DN
PAKLJE 1	254.62	400	~30	400

LEGEND:

- Reinforced concrete, grade MB30, watertightness class V6
- Mass concrete, grade MB30
- Blinding concrete, grade MB20, 10cm thick
- Compacted gravel Ms=15MPa, d=20cm
- Soil

PIPING SCHEDULE: WASHOUT CHAMBER

Item No	Description	Technical features	Material, STD	Qty.
1	Steel elbow	DN400, R=1.5D, 45°	See notes below	1
2	Flat steel flange	DN150, PN10	Material BS EN 10224-L275, corrosion protection - see notes, dimensions to EN1092-1	8
3	Stub end with backing ring	HDPE stub with backing ring DN400, PN10 to EN1092-2	Stub HDPE PE-100, backing ring - flange of steel to BS EN 10224-L275	2
4a	Welded steel pipe	DN400 (406.4/6.3mm), L=2.400mm	See notes below	1
4b	Welded steel pipe	DN400 (406.4/6.3mm), L=680mm	See notes below	1
4c	Welded steel pipe	DN400 (406.4/6.3mm), L=380mm	See notes below	1
4d	Welded steel pipe	DN400 (406.4/6.3mm), L=580mm	See notes below	1
4e	Welded steel pipe	DN400 (406.4/6.3mm), L=720mm	See notes below	1
5	Puddle flange	DN400, flange OD min. 30%> pipe OD, not less than 50mm. Flange thickness min 30%> pipe thickness, but not less than 10mm	Pipe measures to EN10220, material BS EN 10224-L275, corrosion protection - see notes	3
6	Gate valve, resilient seated, manually operated with hand wheel, short body	DN400, PN10, Face-to-face to EN 558 - series 14, flange connections to EN 1092-2	Valve to EN1171, body, bonnet, wedge EN-JS 1050 to EN1563, stem stainless seal min. 13%Cr, epoxy resin powder coating inside & outside, blue to RAL5015, thickness min 250 µm, gasket EPDM	2

PIPING SCHEDULE: WASHOUT CHAMBER

Item No	Description	Technical features	Material, STD	Qty.
8	Flange adapter	DN150, flange to EN 1092-2, PN10	Structure of ductile iron, fasteners AISI304, sealing ring EPDM	1
9	Flap valve	Circular type, DN400, flanged connection to EN 1092-2, PN10	Valve body and flap of S.S. 1.4301. Seal of chloroprene, connecting parts of S.S. A2	1
10	HDPE pipe	OD400mm, SDR17	PE-100, to EN12201	1
11	Ventilation piping	Ventilation piping of stainless steel, DN100 (Ø114.3/1.6mm), straight pipe L=600mm, 2 x elbow 90° - R=1.5D, 3mm thick puddle flange, protection mesh.	Dimensions of pipes according to EN ISO 1127. Material of all items according to EN1.4301.	1
12	Ladder with safety hoops	Fe Variable, made of steel L profiles 40x40x4, bars Ø20 and tin. Anchored to wall. Including set with anchor bolts and other installation materials made of galvanized steel.	Materials to BS EN 10224-L275 and EN1.0037. Corrosion protection: hot galvanization.	1
13	Ductile iron manhole cover & frame	Clear opening 600x600mm. class B125, loading 5t	To BS EN124	1

Notes:
1. All necessary joints, jointing material (gaskets, bolts, nuts, washers, etc. are to be Included)
2. Steel welded pipes shall be to EN10220, material to BS EN 10224-L275.
3. Corrosion protection:
3.1. Outside, in the ground: sand blasting to DIN EN ISO 12944, cold bitumen layer and final layer of reinforced bitumen membrane of 4mm to EN10300
3.2. Outside, within a protection pipe: sand blasting to DIN EN ISO 12944, two layers of zink-epoxy, and two layers of bitumen-epoxy coating of minimal thickness 200 µm
3.3. Outside, in contact with concrete: cement milk coating.
3.4. Inside: sand blasting to DIN EN ISO 12944; and at least two layers of epoxy coating with certificate for drinking water, of minimal thickness 200µm
3.5. The same standards and procedures apply for welds, Inside and ouside
3.6. Steel fittings: material and corrosion protection-equivalent to steel pipes, wall thickness equivalent or larger than of joining pipes
4. Any steel piping, other than steel pipe, should be pre-fabricated
5. Steel elbows must be pre-fabricated with smooth curves, segment-welded elbows are not allowed

Project title:	Kolubara Regional Water Scheme
Tender No:	Europe Aid/131619/C/WKS/RS
Structure/section:	Raw water pipeline Rovni-Paklje
Drawing title:	Washout Chamber "Paklje1" DN400 - layouts and sections
Drawing No:	A-CV-18
Scale:	1:50

Municipal Infrastructure Support Programme EU-funded Project

Beneficiary: Public Company "Kolubara", Valjevo